RAFIX 22 FS+, Leuchtdrucktaster, Blende flach, Bund rund, tastend, Frontring lichtgrau, Blende rot

Haupt- / Anwendungsgebiete

- Messen-Steuern-Regeln
- Elektrotechnik
- Maschinen- und Anlagenbau
- Fahrzeugbau
- Handbediengeräte
- Industrie-Roboter

Spezielle Features

- Leuchtdrucktaster, Beleuchtung der Blende mit SMT-LED
- Geringe Einbautiefe 9,2 mm (PCB) bzw. 27 mm (QC)
- Besonderes taktiles Feedback
- Ideal für die Bedienung mit Handschuhen
- Anschlussarten: Leiterplattenanschluss (PCB) oder Steckanschluss (QC)
- Die PCB-Schaltelemente minimieren Montagefehler
- Schaltelemente mit Silberkontakten (max. 250 V/4 A) oder Goldkontakten (max. 35 V/100 mA)
- Durch den Kurzhubadapter können MICON 5 Kurzhubtaster als Schaltelement verwendet werden
- Design-Anpassung durch verschiedene Frontring-Variationen
- Schutzgrad: IP 65 frontseitig
- Zwei Bundformen: rund und quadratisch

Beschreibung

RAFIX Befehlsgeräte werden bei RAFI als modulare Elemente definiert, bestehend aus Betätigungselement, ggf. Kupplung und individueller Kontakt- oder Beleuchtungseinheit.

Betätigungselemente (wie Drucktaster, Not-Halt Betätiger, etc.) besitzen die vorgesehenen Taktilität, Rückstellung und Funktion nur in Zusammenbau mit den jeweils geeigneten Schaltelementen.

Drucktaster mit transluzenter Blende. In Kombination mit entsprechendem Schaltelement kann die Blende vollfächig ausgeleuchtet werden.

Technische Daten

Allgemein

Demontage möglich	nein
Farbe der Blende	rot
Eigenschaft der Blende / des Pilzes	transluzent
Farbe des Frontringes	lichtgrau

Direkte Links

- RAFI eCatalog

The information in this data sheet only contains general descriptions and / or performance features, which may not apply precisely as described to the respective application, and which may change due to further product enhancements. The technical data, illustrations and other information about our products are the mere results of individual technical testing. These descriptions and other product features are only binding if they expressly agreed upon at the time of the conclusion of a binding contract. In all other cases, we reserve the right to make technical changes as well as changes of availability. Pictures and other graphic illustrations are approximations only. All product names may be trademarks or brand names of the RAFI Group or any other sub-supplier of RAFI. The use of such by any third parties for their own purposes may infringe the rights of the respective entity holding those rights.

RAFI GmbH & Co. KG

Ravensburger Str. 128-134
88276 Berg / Ravensburg
Germany
www.rafi-group.com,
info.headquarters@rafi-group.com

Form des Bundes	rund
Arbeitstemperatur, min.	-25 °C
Arbeitstemperatur, max.	70 °C
Lagertemperatur, min.	-40 °C
Lagertemperatur, max.	80 °C
beleuchtbar	ja
Verpackung	Karton
Verpackungseinheit	10 Stück
Nettogewicht	6,4 g
Lebensdauer	1.000.000 Zyklen
B10	1.300.000 Zyklen
Schutzart frontseitig gem. DIN EN 60529	IP65
UL Enclosure Type Rating	type 1
frontseitig	type 4X indoor
Umweltbeständigkeit	IEC 60068-2-14 IEC 60068-2-30 IEC 60068-2-33 IEC 60068-2-78
Salznebelbeständigkeit nach Norm	IEC 60068-2-11
MOQ Auftrag	10 Stück
RoHS konform	ja
REACH konform	ja

Einbaumaße

Außenmaß Länge	29,8 mm
Außenmaß Breite	29,8 mm
Außenmaß Höhe	18,5 mm
Einbauöffnung	22,3 mm
Einbautiefe	9,2 mm
Einbauhöhe	9,85 mm
Raster, min.	30 x 30 mm
Maß des Bundes	ø 29,8 mm

Mechanische Kennwerte

Betätigungsfunktion	tastend
Betätigungskraft, max.	100 N
Betätigungsweg, max.	4 mm
Befestigung	Gewindering
Drehmoment Gewindering, max.	1,2 Nm

The information in this data sheet only contains general descriptions and / or performance features, which may not apply precisely as described to the respective application, and which may change due to further product enhancements. The technical data, illustrations and other information about our products are the mere results of individual technical testing. These descriptions and other product features are only binding if they expressly agreed upon at the time of the conclusion of a binding contract. In all other cases, we reserve the right to make technical changes as well as changes of availability. Pictures and other graphic illustrations are approximations only. All product names may be trademarks or brand names of the RAFI Group or any other sub-supplier of RAFI. The use of such by any third parties for their own purposes may infringe the rights of the respective entity holding those rights.

RAFI GmbH & Co. KG

Ravensburger Str. 128-134
88276 Berg / Ravensburg
Germany
www.rafi-group.com,
info.headquarters@rafi-group.com

Zeichnungen

Maß-Zeichnungen

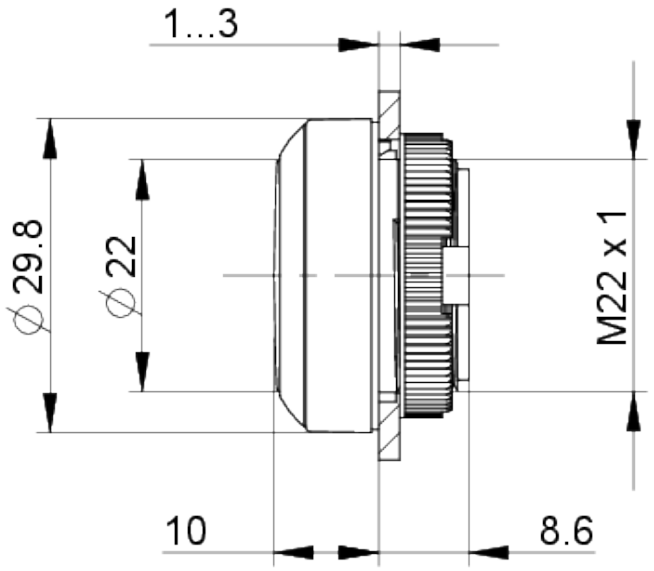

System-Zeichnung

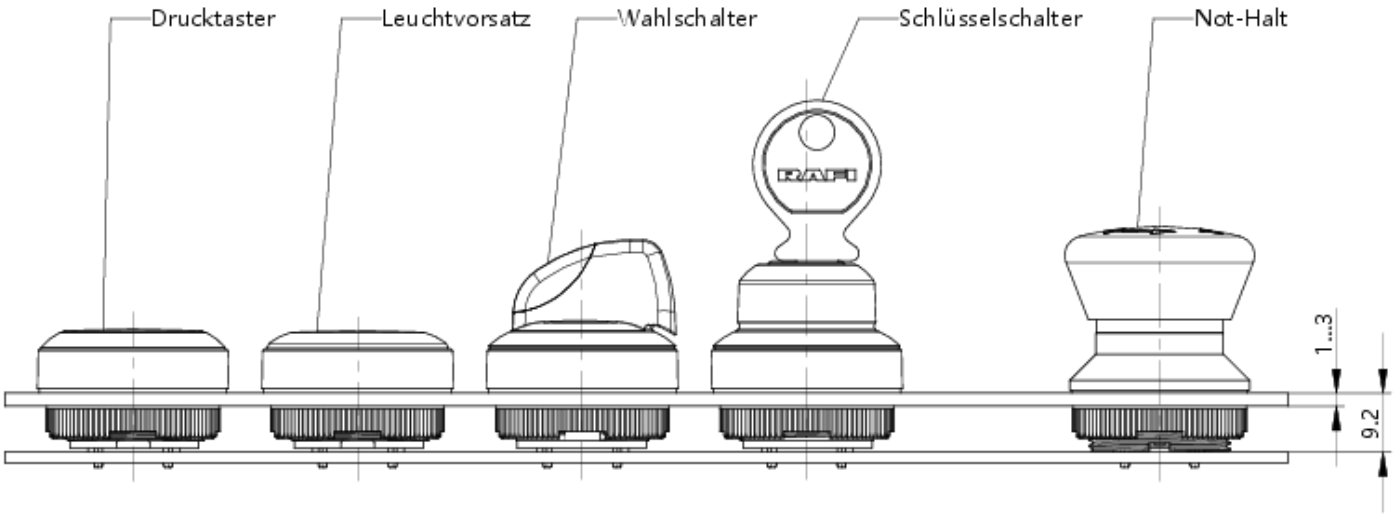

The information in this data sheet only contains general descriptions and / or performance features, which may not apply precisely as described to the respective application, and which may change due to further product enhancements. The technical data, illustrations and other information about our products are the mere results of individual technical testing. These descriptions and other product features are only binding if they expressly agreed upon at the time of the conclusion of a binding contract. In all other cases, we reserve the right to make technical changes as well as changes of availability. Pictures and other graphic illustrations are approximations only. All product names may be trademarks or brand names of the RAFI Group or any other sub-supplier of RAFI. The use of such by any third parties for their own purposes may infringe the rights of the respective entity holding those rights.

RAFI GmbH & Co. KG

Ravensburger Str. 128-134
88276 Berg / Ravensburg
Germany
www.rafi-group.com,
info.headquarters@rafi-group.com

System-Zeichnung

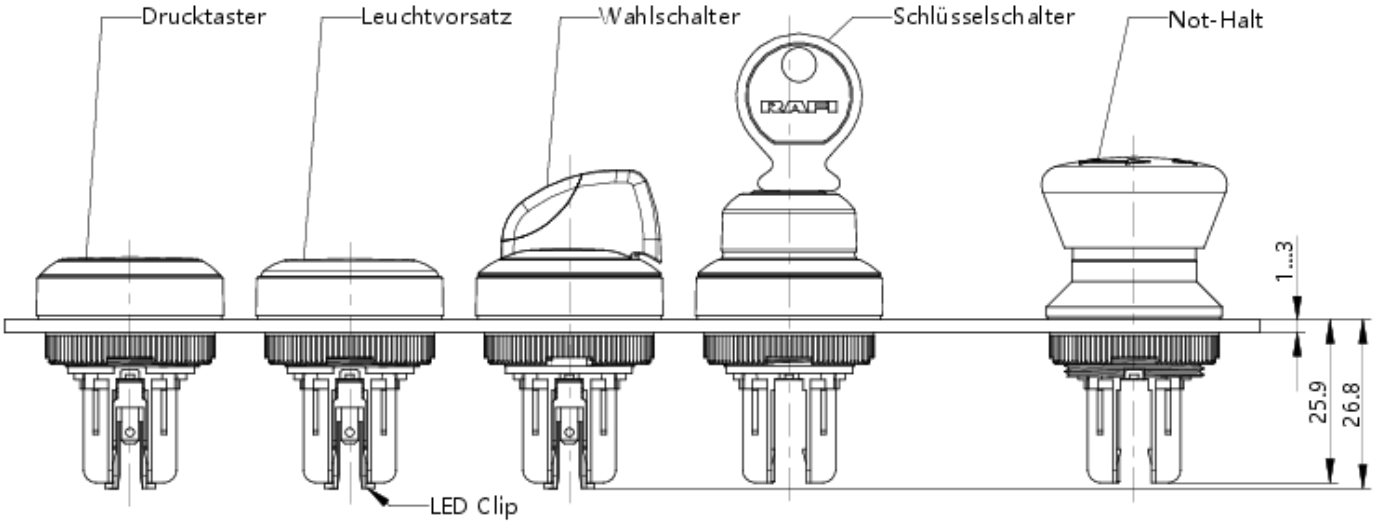

Einbauöffnung-Zeichnungen

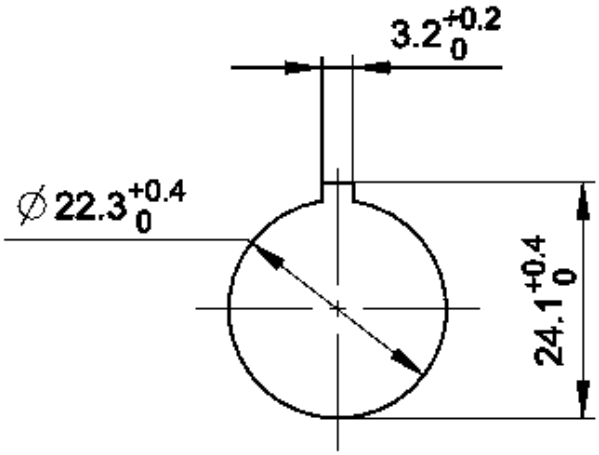

acc. to IEC 60947-5-1

The information in this data sheet only contains general descriptions and / or performance features, which may not apply precisely as described to the respective application, and which may change due to further product enhancements. The technical data, illustrations and other information about our products are the mere results of individual technical testing. These descriptions and other product features are only binding if they expressly agreed upon at the time of the conclusion of a binding contract. In all other cases, we reserve the right to make technical changes as well as changes of availability. Pictures and other graphic illustrations are approximations only. All product names may be trademarks or brand names of the RAFI Group or any other sub-supplier of RAFI. The use of such by any third parties for their own purposes may infringe the rights of the respective entity holding those rights.

RAFI GmbH & Co. KG

Ravensburger Str. 128-134
88276 Berg / Ravensburg
Germany
www.rafi-group.com,
info.headquarters@rafi-group.com

Frontplatten-Zeichnung

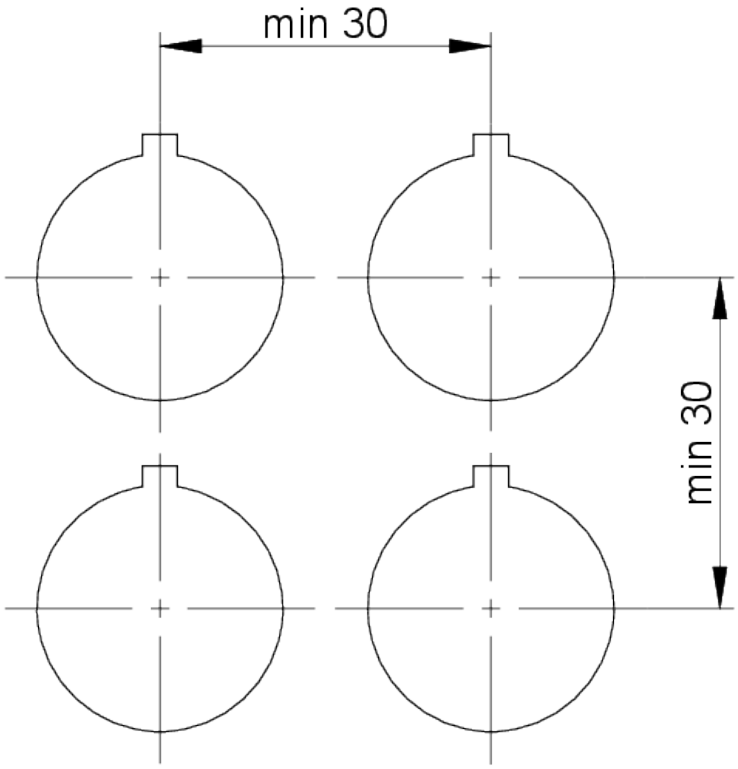

The information in this data sheet only contains general descriptions and / or performance features, which may not apply precisely as described to the respective application, and which may change due to further product enhancements. The technical data, illustrations and other information about our products are the mere results of individual technical testing. These descriptions and other product features are only binding if they expressly agreed upon at the time of the conclusion of a binding contract. In all other cases, we reserve the right to make technical changes as well as changes of availability. Pictures and other graphic illustrations are approximations only. All product names may be trademarks or brand names of the RAFI Group or any other sub-supplier of RAFI. The use of such by any third parties for their own purposes may infringe the rights of the respective entity holding those rights.

RAFI GmbH & Co. KG

Ravensburger Str. 128-134
88276 Berg / Ravensburg
Germany
www.rafi-group.com,
info.headquarters@rafi-group.com