RAFIX 22 FS+, Leuchtwahlschalter, Bund rund, Frontring grün, 1 x 90°, Form V, rastend, beleuchtbar

Haupt- / Anwendungsgebiete

- Messen-Steuern-Regeln
- Elektrotechnik
- Maschinen- und Anlagenbau
- Fahrzeugbau
- Handbediengeräte
- Industrie-Roboter

Spezielle Features

- Beleuchtung der der Drehgriffmarkierung mit SMT-LED
- Farbige Ausleuchtung mit farbigen LEDs möglich
- Geringe Einbautiefe 9,2 mm (PCB) bzw. 27 mm (QC)
- Anschlussarten: Leiterplattenanschluss (PCB) oder Steckanschluss (QC)
- Die PCB-Schaltelemente minimieren Montagefehler
- Schaltelemente mit Silberkontakten (max. 250 V/4 A) oder Goldkontakten (max. 35 V/100 mA)
- Design-Anpassung durch verschiedene Frontring-Variationen
- Schutzgrad: IP 65 frontseitig
- Zwei Bundformen: rund und quadratisch

Beschreibung

RAFIX Befehlsgeräte werden bei RAFI als modulare Elemente definiert, bestehend aus Betätigungselement, ggf. Kupplung und individueller Kontakt- oder Beleuchtungseinheit.

Betätigungselemente (wie Drucktaster, Not-Halt Betätiger, etc.) besitzen die vorgesehenen Taktilität, Rückstellung und Funktion nur in Zusammenbau mit den jeweils geeigneten Schaltelementen.

Die transluzente Drehgrifmarkierung ist bei Kombination mit einem entsprechenden Schaltelement beleuchtbar.

Für die farbige Ausleuchtung der Drehgriffmarkierung verwenden Sie bitte farbige LEDs.

Technische Daten

Allgemein

Demontage möglich	nein
Farbe des Frontringes	grün
Form des Bundes	rund
Arbeitstemperatur, min.	-25 °C
Arbeitstemperatur, max.	70 °C

Direkte Links

- RAFI eCatalog

The information in this data sheet only contains general descriptions and / or performance features, which may not apply precisely as described to the respective application, and which my change due to further product enhancements. The technical data, illustrations and other information about our products are the mere results of individual technical testing. These descriptions and other product features are only binding if they expressly agreed upon at the time of the conclusion of a binding contract. In all other cases, we reserve the right to make technical changes as well as changes of availability. Pictures and other graphic illustrations are approximations only. All product names may be trademarks or brand names of the RAFI Group or any other sub-supplier of RAFI. The use of such by any third parties for their own purposes may infringe the rights of the respective entity holding those rights.

RAFI GmbH & Co. KG

Ravensburger Str. 128-134
88276 Berg / Ravensburg
Germany
www.rafi-group.com,
info.headquarters@rafi-group.com

Lagertemperatur, min.	-40 °C
Lagertemperatur, max.	80 °C
beleuchtbar	ja
Verpackung	Karton
Verpackungseinheit	10 Stück
Lebensdauer	300.000 Zyklen
B10	390.000 Zyklen
Schutzart frontseitig gem. DIN EN 60529	IP65
UL Enclosure Type Rating	type 1
frontseitig	type 4X indoor
Umweltbeständigkeit	IEC 60068-2-14 IEC 60068-2-30 IEC 60068-2-33 IEC 60068-2-78
Salznebelbeständigkeit nach Norm	IEC 60068-2-11
MOQ Auftrag	10 Stück
RoHS konform	ja
REACH konform	ja

Einbaumaße

Außenmaß Länge	29,8 mm
Außenmaß Breite	29,8 mm
Außenmaß Höhe	32,4 mm
Einbauöffnung	22,3 mm
Einbautiefe	9,2 mm
Einbauhöhe	22,24 mm
Raster, min.	30 x 30 mm
Maß des Bundes	ø 29,8 mm

Mechanische Kennwerte

Betätigungsfunktion	rastend
Betätigungsmoment, max.	1,5 Nm
Drehwinkel	1 x 90°, Form V
Befestigung	Gewindering
Drehmoment Gewindering, max.	1,2 Nm

The information in this data sheet only contains general descriptions and / or performance features, which may not apply precisely as described to the respective application, and which my change due to further product enhancements. The technical data, illustrations and other information about our products are the mere results of individual technical testing. These descriptions and other product features are only binding if they expressly agreed upon at the time of the conclusion of a binding contract. In all other cases, we reserve the right to make technical changes as well as changes of availability. Pictures and other graphic illustrations are approximations only. All product names may be trademarks or brand names of the RAFI Group or any other sub-supplier of RAFI. The use of such by any third parties for their own purposes may infringe the rights of the respective entity holding those rights.

RAFI GmbH & Co. KG

Ravensburger Str. 128-134
88276 Berg / Ravensburg
Germany
www.rafi-group.com,
info.headquarters@rafi-group.com

Zeichnungen

Maß-Zeichnungen

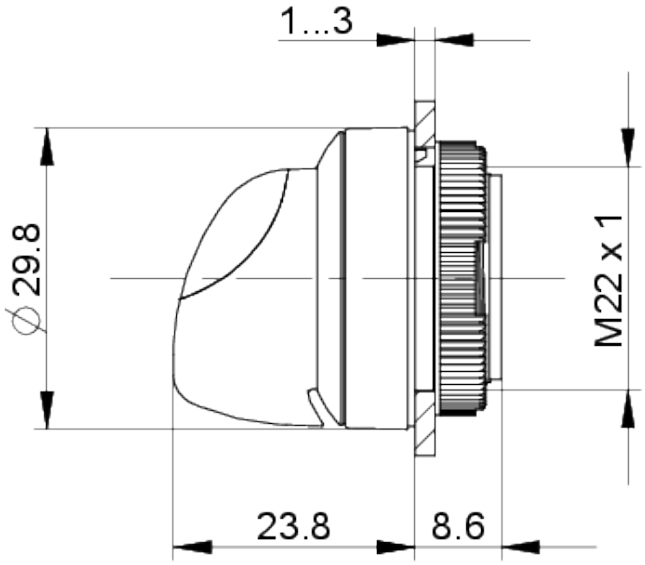

System-Zeichnung

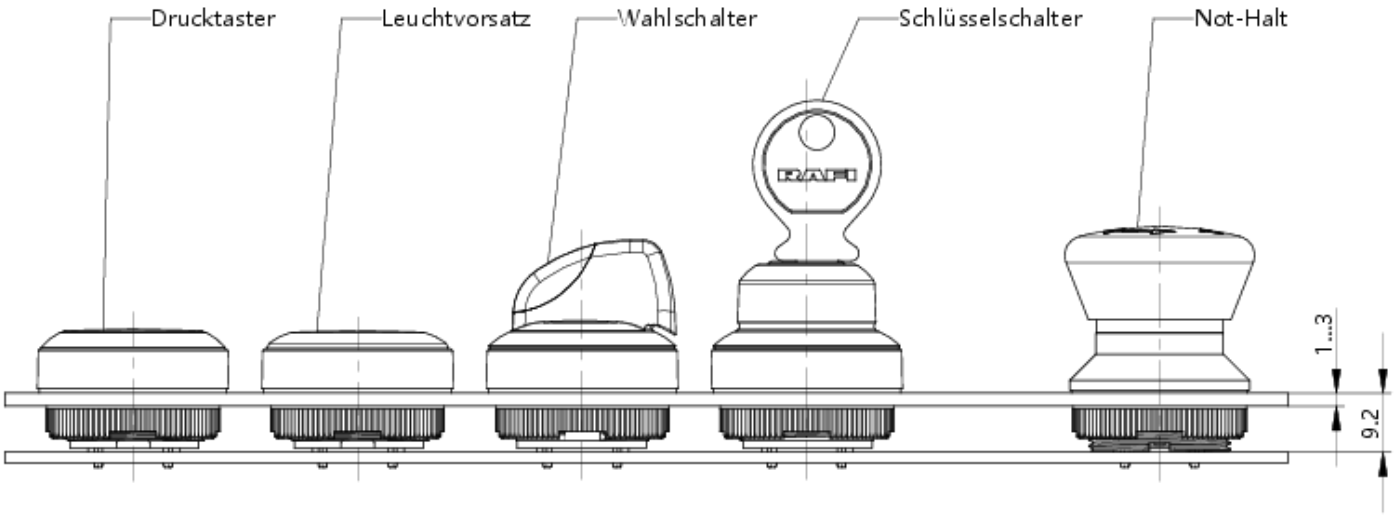

The information in this data sheet only contains general descriptions and / or performance features, which may not apply precisely as described to the respective application, and which my change due to further product enhancements. The technical data, illustrations and other information about our products are the mere results of individual technical testing. These descriptions and other product features are only binding if they expressly agreed upon at the time of the conclusion of a binding contract. In all other cases, we reserve the right to make technical changes as well as changes of availability. Pictures and other graphic illustrations are approximations only. All product names may be trademarks or brand names of the RAFI Group or any other sub-supplier of RAFI. The use of such by any third parties for their own purposes may infringe the rights of the respective entity holding those rights.

RAFI GmbH & Co. KG

Ravensburger Str. 128-134
88276 Berg / Ravensburg
Germany
www.rafi-group.com,
info.headquarters@rafi-group.com

System-Zeichnung

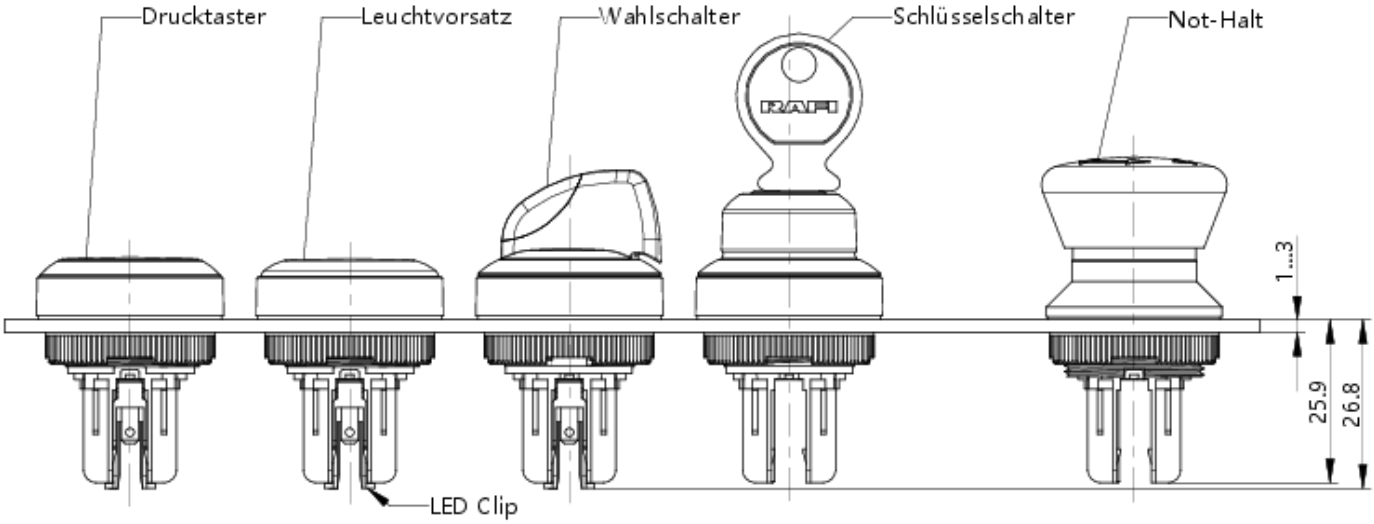

Einbauöffnung-Zeichnungen

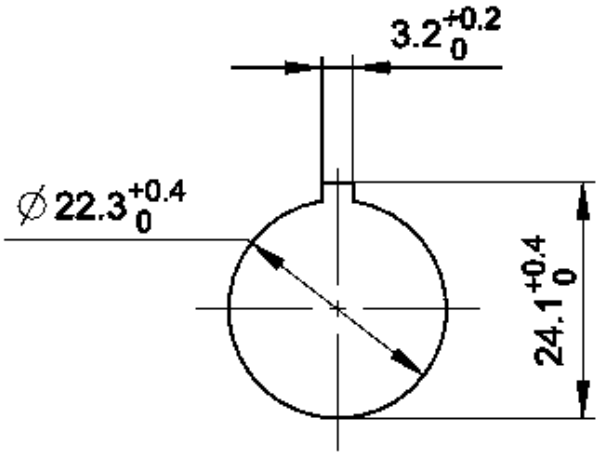

acc. to IEC 60947-5-1

The information in this data sheet only contains general descriptions and / or performance features, which may not apply precisely as described to the respective application, and which my change due to further product enhancements. The technical data, illustrations and other information about our products are the mere results of individual technical testing. These descriptions and other product features are only binding if they expressly agreed upon at the time of the conclusion of a binding contract. In all other cases, we reserve the right to make technical changes as well as changes of availability. Pictures and other graphic illustrations are approximations only. All product names may be trademarks or brand names of the RAFI Group or any other sub-supplier of RAFI. The use of such by any third parties for their own purposes may infringe the rights of the respective entity holding those rights.

RAFI GmbH & Co. KG

Ravensburger Str. 128-134
88276 Berg / Ravensburg
Germany
www.rafi-group.com,
info.headquarters@rafi-group.com

Frontplatten-Zeichnung

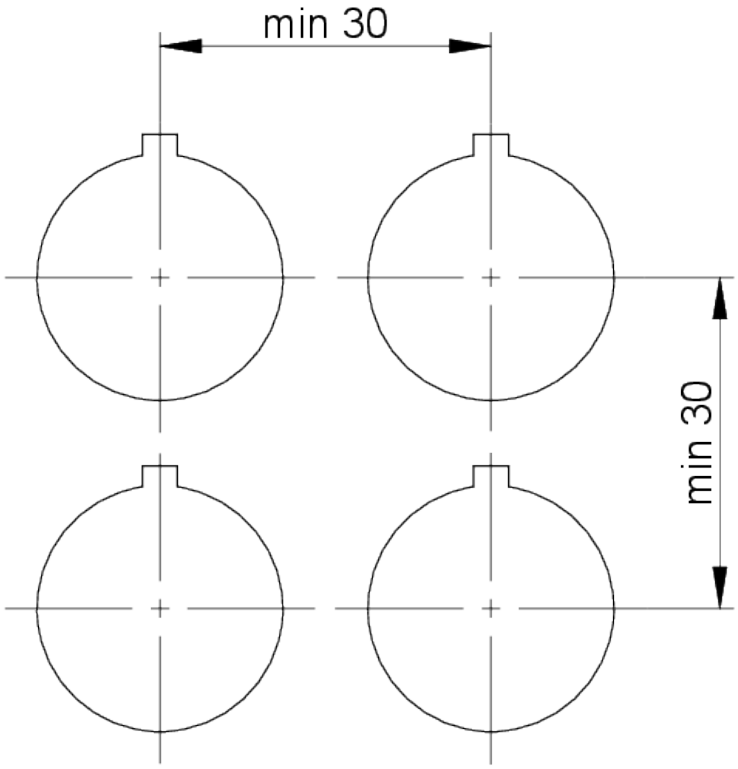

The information in this data sheet only contains general descriptions and / or performance features, which may not apply precisely as described to the respective application, and which my change due to further product enhancements. The technical data, illustrations and other information about our products are the mere results of individual technical testing. These descriptions and other product features are only binding if they expressly agreed upon at the time of the conclusion of a binding contract. In all other cases, we reserve the right to make technical changes as well as changes of availability. Pictures and other graphic illustrations are approximations only. All product names may be trademarks or brand names of the RAFI Group or any other sub-supplier of RAFI. The use of such by any third parties for their own purposes may infringe the rights of the respective entity holding those rights.

RAFI GmbH & Co. KG

Ravensburger Str. 128-134
88276 Berg / Ravensburg
Germany
www.rafi-group.com,
info.headquarters@rafi-group.com