1.14.002.201/0000

MICON 5, SMT standard, 1.5 ± 0.3 N, 1 NO

LBL_NRFND

fields of application

- Measurement-control-regulation
- Mechanical and system engineering
- Automotive
- Electro-medical

special features

- Gold contacts, reliable switching with low currents
- Special tactile feedback
- High packing density due to small form factor (5.1 x 6.4 mm)
- Different operating forces
- Ring and full illumination of the button surface due to plunger
- Variable overall heights due to plunger
- Terminal technology: SMT
- Traceability through product identification in accordance with DIN EN ISO 9001

description

MICON 5 tactile switches offer extreme switching reliability, with a very small space requirement. They can be arranged individually, in rows or as key blocks. For use beneath overlays, we recommend combining the MICON 5 tactile switches with plungers. Here are the properties at a glance:

- Suitable for the most important soldering techniques
- Soldering bath for THT versions
- Reflow soldering for SMT versions
- Vapor phase soldering for SMT versions
- Manual soldering
- Processing of the SMT design with SMT automatic assembly machines
- IMDS entry

- Packaging in blister tape, spool with 2,100 pieces
- Proposal for stencil printing: 150 µm stencil with 10% pad reduction on area

Key switch 1.14.002.201/0000 does not offer any tactile or acoustic feedback. It is therefore usually only used as a redundant additional switch for other MICON standard key switches, if this is required for safety reasons.

technical data

general

Operating temperature, min.	-40 °C
Operating temperature, max.	90 °C
Storage temperature, min.	-40 °C
Storage temperature, max.	90 °C
illuminated	No
Soldering	Reflow

direct links

- RAFI eCatalog

RAFI GmbH & Co. KG

Ravensburger Str. 128-134
88276 Berg / Ravensburg
Germany
www.rafi-group.com,
info.headquarters@rafi-group.com

Solder heat resistance according to standard	DIN EN 60068-2-58 DIN EN 61760-1
Packaging	Blister
Packaging unit	2,100 pcs.
net weight	0.3 g
Operating life	1,000,000 cycles
B10	1,300,000 cycles
MSL Moisture Sensitivity Level	1
Shock resistance according to standard IEC 60068-2-27	100 g at 6 ms amplitude semi-sinusoidal
oscillation restistance according to standard IEC 60068-2-6	5 g at 10...500 Hz
MOQ order	2,100 pcs.
RoHS compliant	Yes
REACH compliant	Yes

mounting diameters

Outside dimension, length	6.4 ± 0.1 mm
Outside dimension, width	5.1 ± 0.1 mm
Installation height	3.85 ± 0.1 mm
Grid, min.	6 x 7.8 mm

mechanical data

Actuation function	momentary contact function
Operating force, max.	4 N
Operating force, min.	1.5 ± 0.3 N
Switching travel	0.7 ± 0.15 mm
Contact function	1 NO
Contact system	Snap-action contact SPST - Single Pole Single Throw
Contact material	Gold
Solderability	Yes
Terminal on the rear	SMT

electrical data

Rated voltage, min.	0.02 V
Rated voltage, max.	35 V
Dielectric strength	250 V
Rated current, min.	0.00001 A
Rated current, max.	0.1 A
Rated power, max.	1 W

RAFI GmbH & Co. KG

Ravensburger Str. 128-134
88276 Berg / Ravensburg
Germany
www.rafi-group.com,
info.headquarters@rafi-group.com

drawings

Dimensioned drawing

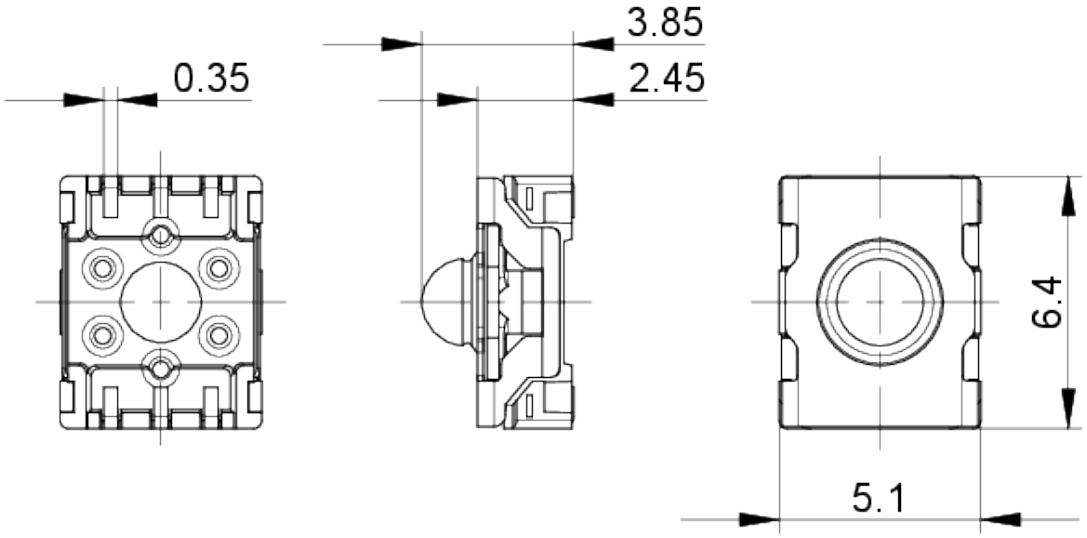

System drawing

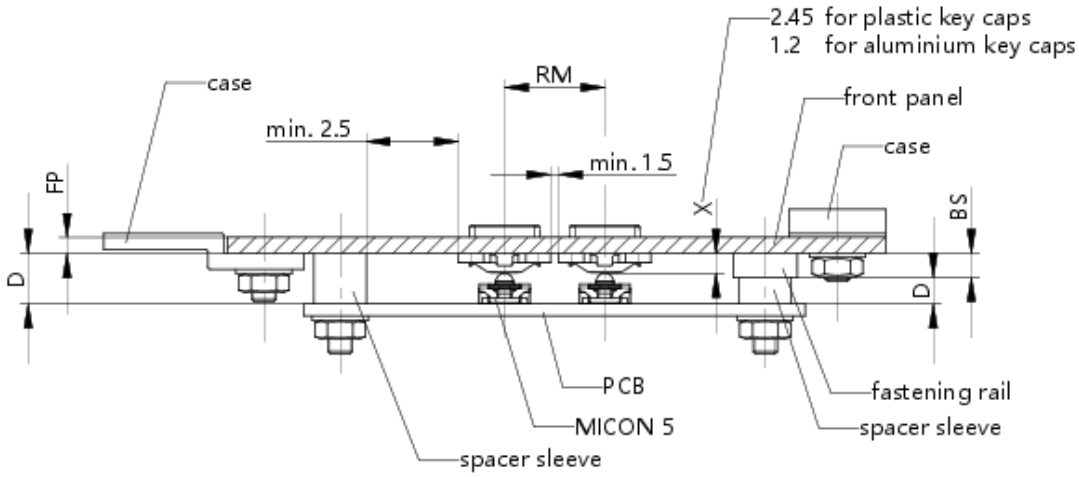

RAFI GmbH & Co. KG

Ravensburger Str. 128-134
88276 Berg / Ravensburg
Germany
www.rafi-group.com,
info.headquarters@rafi-group.com

PCB drawing

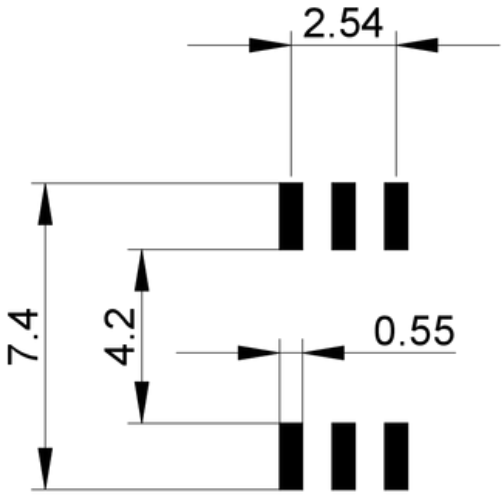

PCB drawing

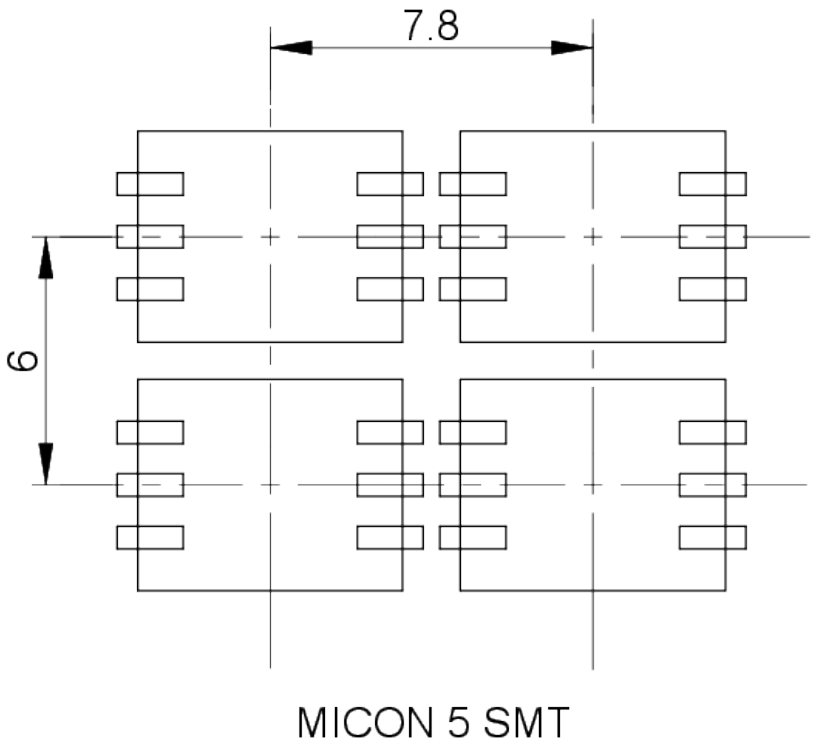

RAFI GmbH & Co. KG

Ravensburger Str. 128-134
88276 Berg / Ravensburg
Germany
www.rafi-group.com,
info.headquarters@rafi-group.com

Schematic diagram

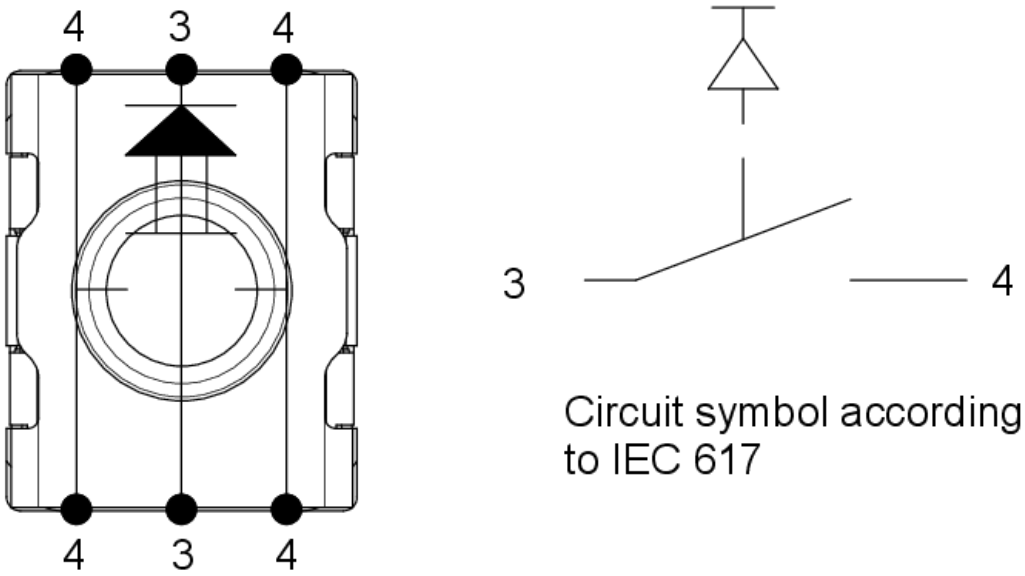

Product labeling drawing

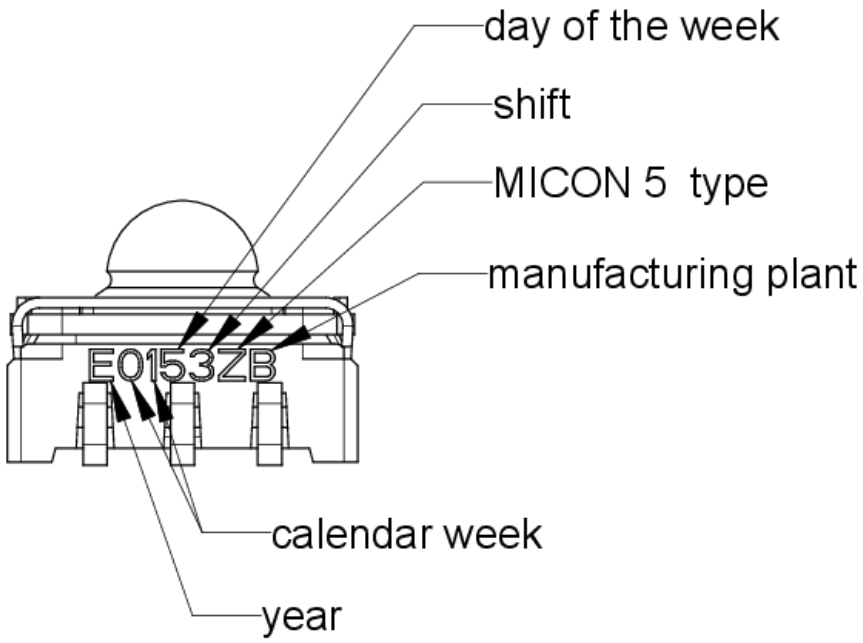

RAFI GmbH & Co. KG

Ravensburger Str. 128-134
88276 Berg / Ravensburg
Germany
www.rafi-group.com,
info.headquarters@rafi-group.com

Packaging drawing

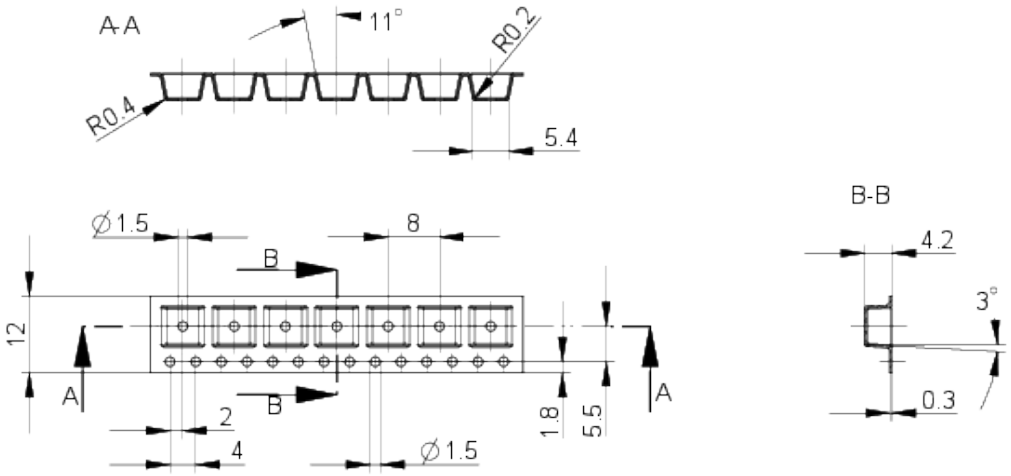

RAFI GmbH & Co. KG

Ravensburger Str. 128-134
88276 Berg / Ravensburg
Germany
www.rafi-group.com,
info.headquarters@rafi-group.com

mounting

RAFI soldering profile for ROHS compliant reflow components

Publication date: October 7, 2021

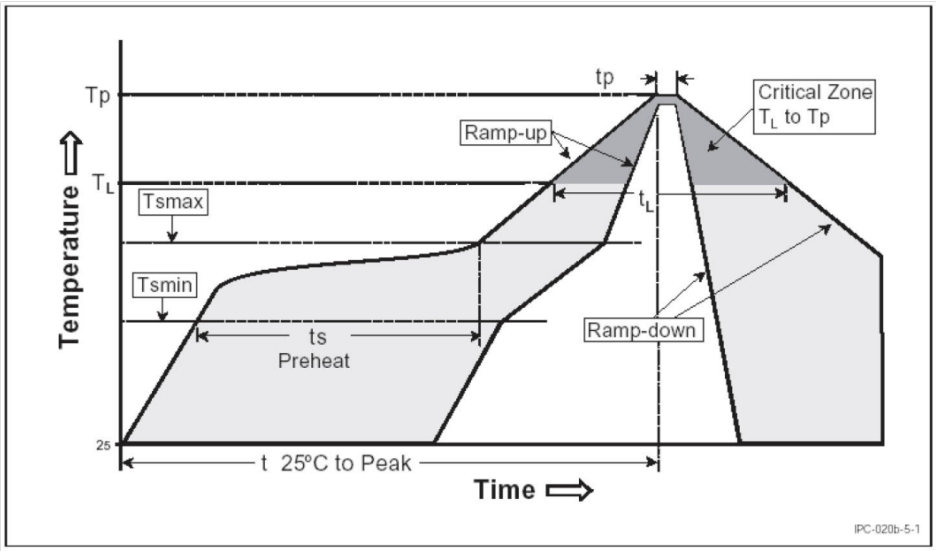

Parameter	RAFI values
Gradient (T_L to T_P)	max. 3°C / s
Preheating zone Minimum temperature (T_{smin}) Maximum temperature (T_{smax}) Time (from min. to max.) (ts)	 150°C 200°C 60 - 120 s
Gradient (T_{smax} to T_L)	max. 3°C / s
Time over melting temperature (T_L) time (t_L)	 217°C 60 – 150 s
Peak temperature (T_P)	max. 260°C (+0°C)
Time within peak temperature – 5°C (tp)	20-40 s
Gradient ramp down	max. 6°C / s
Time difference from 25°C to peak temperature	max. 8 minutes

The reflow soldering profile is based on the definition of Jedec J-STD-020D.

RAFI GmbH & Co. KG
Ravensburger Str. 128-134, 88276 Berg / Ravensburg
GERMANY – www.rafi-group.com

RAFI GmbH & Co. KG

Ravensburger Str. 128-134
88276 Berg / Ravensburg
Germany
www.rafi-group.com,
info.headquarters@rafi-group.com